EPSON

24-Pin Dot
Matrix Printer

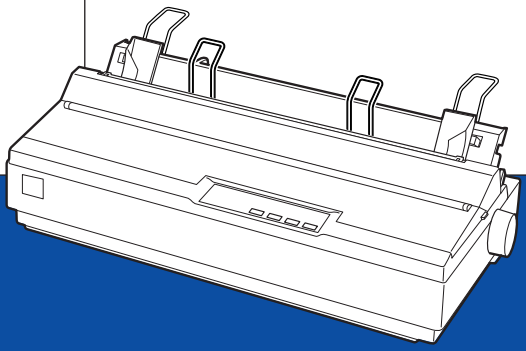

LQ-1150

User's Guide

4014577-00
C01

Control Panel Buttons and Lights

Tear Off (Pitch/Font) lights**
Flash when continuous paper is in the tear-off position; otherwise, the lights indicate the selected font.

LF/FF button
- Feeds paper line by line when pressed and released.
- Ejects a single sheet or advances continuous paper to the next top-of-form position when held down.

Paper Out light
- On when no paper is loaded in the selected paper source or when paper is not loaded correctly.
- Flashes when paper has not been fully ejected or a paper jam has occurred.

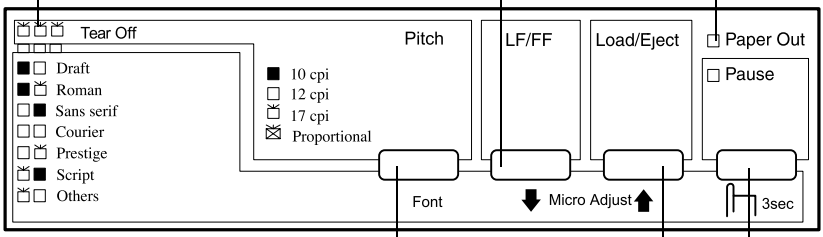

Pitch (Font) button**
Selects a pitch and font.

Load/Eject button
- Loads a single sheet of paper.
- Ejects a single sheet of paper if a sheet is loaded.
- Loads continuous paper from the standby position.
- Feeds continuous paper backwards to the standby position.

Pause button
Stops printing temporarily, and resumes printing when pressed again. When pressed for three seconds, turns on the Micro Adjust mode*. To turn off, press again.

Pause light
- On when the printer is paused.
- Flashes when the printer is in the Micro Adjust mode*.
- Flashes when the print head has overheated.

***Micro Adjust mode**
When you hold down the Pause button for three seconds, the printer enters the micro adjust mode. In this mode, you can press the LF/FF⬇ and Load/Eject⬆ buttons to adjust the top-of-form or tear-off position. See Chapter 2, "Using the Printer."

****Font select**
In the Micro Adjust mode, you can select the font to use for printing by pressing the Tear Off button. The Tear Off lights turn on, off or flash to indicate the selected font.

EPSON®

24-Pin Dot Matrix Printer

LQ-1150

All rights reserved. No part of this publication may be reproduced, stored in a retrieval system, or transmitted in any form or by any means, electronic, mechanical, photocopying, recording, or otherwise, without the prior written permission of SEIKO EPSON CORPORATION. The information contained herein is designed only for use with this EPSON printer. EPSON is not responsible for any use of this information as applied to other printers.

Neither SEIKO EPSON CORPORATION nor its affiliates shall be liable to the purchaser of this product or third parties for damages, losses, costs, or expenses incurred by the purchaser or third parties as a result of: accident, misuse, or abuse of this product or unauthorized modifications, repairs, or alterations to this product, or (excluding the U.S.) failure to strictly comply with SEIKO EPSON CORPORATION's operating and maintenance instructions.

SEIKO EPSON CORPORATION shall not be liable for any damages or problems arising from the use of any options or any consumable products other than those designated as Original EPSON Products or EPSON Approved Products by SEIKO EPSON CORPORATION.

EPSON and EPSON ESC/P are registered trademarks and EPSON ESC/P2 is a trademark of SEIKO EPSON CORPORATION.

Microsoft, Windows, and Windows NT are registered trademarks of Microsoft Corporation.

IBM is a registered trademark of International Business Machines Corporation.

General Notice: *Other product names used herein are for identification purposes only and may be trademarks of their respective owners. EPSON disclaims any and all rights in those marks.*

Copyright © 2001 by SEIKO EPSON CORPORATION, Nagano, Japan.

Printed on Recycled Paper.

User's Guide

Contents

Getting to Know Your Printer

Warnings, Cautions, and Notes 1
Important Safety Instructions 2
Hot Parts Caution Symbol 3
ENERGY STAR® Compliance 4

Chapter 1 Setting Up the Printer

Unpacking the Printer 1-2
Choosing a place for the printer 1-3
Assembling the Printer 1-5
Installing the paper-feed knob 1-5
Attaching the paper supports 1-6
Plugging in the printer 1-7
Installing or replacing the ribbon cartridge 1-8
Running the Self Test 1-13
Connecting the Printer to Your Computer 1-16
Using the parallel interface 1-16
Using the serial interface 1-18
Installing the Printer Software 1-20
Installing the software in Windows Me, 98, 95, 2000, or NT 4.01-21
For DOS programs 1-22

Chapter 2 Using the Printer

Using the Control Panel 2-2
Selecting a built-in font 2-2
About Your Printer's Default Settings 2-3
Changing default settings 2-9
Printing on Continuous Paper 2-10
Printing with the push tractor 2-11

Removing a printed document from the push tractor. . . . 2-15
Switching back to single sheets 2-16
Printing with the pull tractor. 2-17
Adjusting the top-of-form position. 2-22
Advancing the paper to the tear-off edge 2-24
Printing on Single Sheets. 2-27
Loading single sheets 2-27
Printing on Special Paper 2-28
Adjusting the paper-thickness lever. 2-28
Multipart forms 2-30
Labels 2-30
Envelopes 2-32
Installing and Using Options 2-33
Cut-sheet feeder. 2-33
Pull tractor unit 2-37
Roll paper holder. 2-39
Print server 2-41

Chapter 3 Using the Printer Software

Using the Printer Driver with Windows Me, 98, and 95 3-2
Accessing the printer driver from Windows applications 3-2
Accessing the printer driver from the Start menu 3-4
Changing the printer driver settings 3-4
Using the Printer Driver with Windows 2000 and NT 4.0 3-5
Accessing the printer driver from Windows applications 3-5
Accessing the printer driver from the Start menu 3-8
Changing the printer driver settings 3-10
Printer Driver Settings Overview 3-11
About the EPSON Status Monitor 3 Utility 3-13
Setting up EPSON Status Monitor 3. 3-13
Accessing EPSON Status Monitor 3 3-15

Chapter 4 Troubleshooting

Using the Error Indicators 4-2
Problems and Solutions 4-4
Power Supply 4-4
Power is not being supplied 4-4
Printing 4-5
The printer does not print 4-5
The print is faint or uneven. 4-6
Dots are missing in printed characters or graphics. 4-7
Printed characters are not what you expected 4-7
The print position is not what you expected 4-8
Paper Handling 4-9
Single sheets do not feed properly. 4-9
Continuous paper does not feed properly 4-9
Options 4-11
When you use the cut-sheet feeder, the paper does not feed properly. 4-11
Switching between the cut-sheet feeder and the push tractor does not work properly 4-12
Using the pull tractor with the push tractor, continuous paper does not feed properly 4-12

Appendix A

Cleaning the Printer A-2
Transporting the Printer A-3
Printer Specifications A-4
Mechanical. A-4
Electronic A-6
Electrical. A-7
Environmental A-8
Paper. A-8
Printable area A-11
Paper alignment A-15
Command Lists A-16
EPSON ESC/P2 control codes A-16
IBM PPDS emulation control codes. A-17

Contacting Customer Support A-18
Customer support in India. A-19

Index

Getting to Know Your Printer

Your EPSON® LQ-1150 24-pin dot matrix printer provides high-quality printing and superior performance in a compact design. Its features include:

- ❑ A variety of paper paths to suit your printing needs.
- ❑ The ability to handle a wide range of paper types, including continuous paper, multipart forms (with one original and up to three copies), labels, single sheets, cards, and envelopes.
- ❑ High-speed printing of up to 300 cps (characters per second) at 10 cpi (characters per inch) or 360 cps at 12 cpi.

Your printer comes packaged with the printer driver and other software, including the EPSON Status Monitor 3 utility for Microsoft® Windows® Me, 98, 95, 2000, or NT 4.0. The EPSON Status Monitor 3 utility lets you check the status of your printer quickly and easily.

Warnings, Cautions, and Notes

This guide uses the following conventions:

Warnings *must be followed to avoid bodily injury.*

Cautions *must be observed to avoid damage to your equipment.*

Notes *contain important information and useful tips on the operation of your printer.*

Important Safety Instructions

Read all of these safety instructions before using the printer. In addition, follow all warnings and instructions marked on the printer itself.

- ❑ Do not place the printer on an unstable surface or near a radiator or heat source.
- ❑ Place the printer on a flat surface. The printer will not operate properly if it is tilted or placed at an angle.
- ❑ Do not block or cover the slots and openings in the printer's cabinet, and do not insert objects through the slots.
- ❑ Use only the type of power source indicated on the printer's label.
- ❑ Connect all equipment to properly grounded power outlets. Avoid using outlets on the same circuit as photocopiers or air control systems that regularly switch on and off.
- ❑ Do not use a damaged or frayed power cord.
- ❑ If you use an extension cord with the printer, make sure the total ampere rating of all devices plugged into the extension cord does not exceed the cord's ampere rating. Also, make sure that the total ampere of all devices plugged into the wall outlet does not exceed the wall outlet's ampere rating.
- ❑ Unplug the printer before cleaning it, and always clean it with a piece of damp cloth only.
- ❑ Do not spill liquid onto the printer.
- ❑ Except as specifically explained in this guide, do not attempt to service the printer yourself.